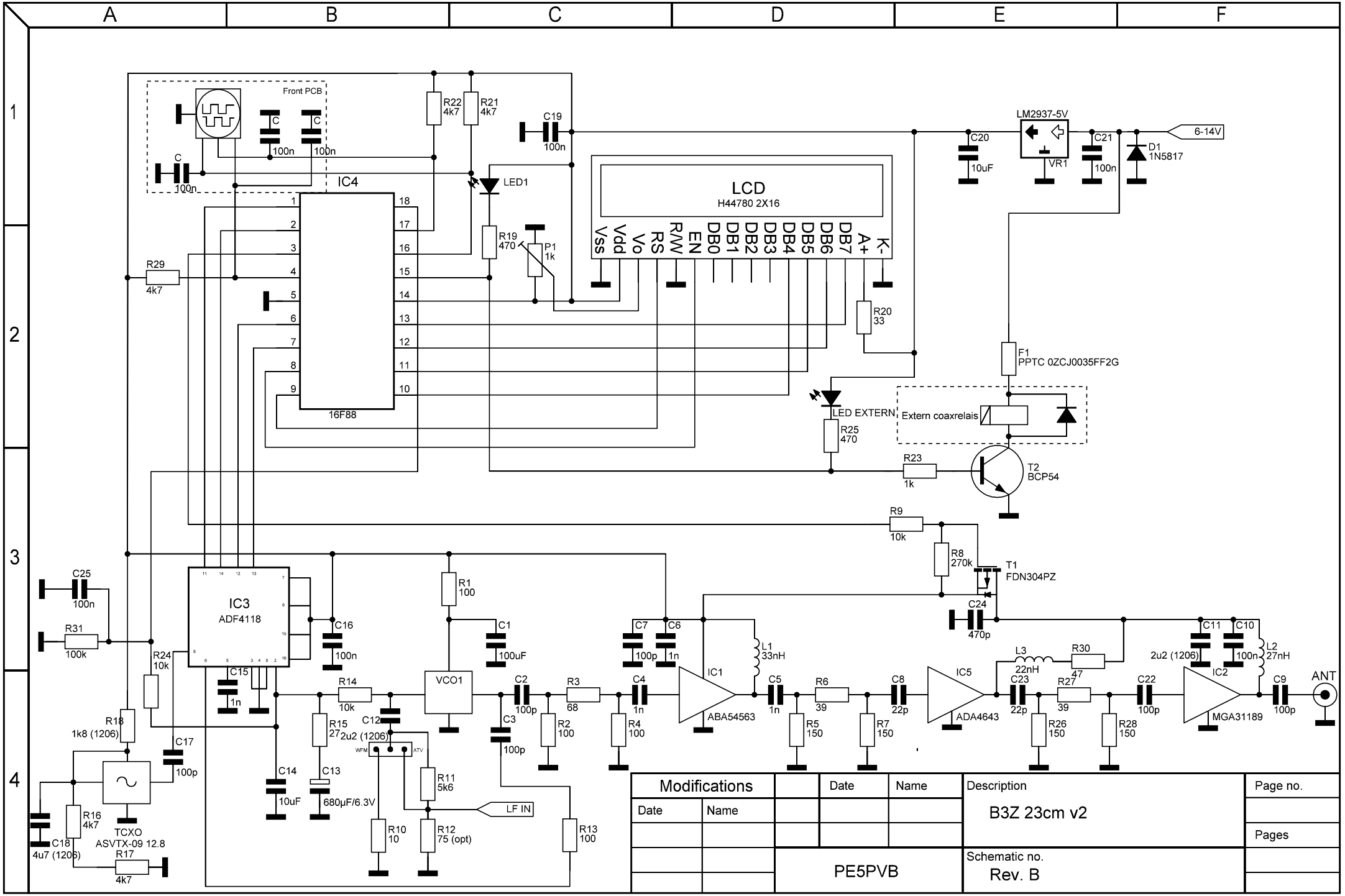

A
B
C
D
E
F
1
2
3
4
Front PCB
C
100n
C
100n
C
100n
R22
4k7
R21
4k7
C19
100n
LM2937-5V
VR1
C20
10uF
C21
100n
D1
1N5817
6-14V
IC4
16F88
LED1
R19
470
P1
1k
LCD
H44780 2X16
Vss
Vdd
Vo
RS
R/W
EN
DB0
DB1
DB2
DB3
DB4
DB5
DB6
DB7
A+
K-
R29
4k7
R20
33
F1
PPTC 0ZCJ0035FF2G
LED EXTERN
R25
470
Extern coaxrelais
R23
1k
T2
BCP54
R9
10k
R8
270k
T1
FDN304PZ
C24
470p
C25
100n
R31
100k
IC3
ADF4118
R24
10k
C16
100n
R1
100
C1
100uF
C15
1n
R14
10k
VCO1
C2
100p
R3
68
C4
1n
C7
100p
C6
1n
IC1
ABA54563
L1
33nH
C5
1n
R6
39
C8
22p
IC5
ADA4643
L3
22nH
R30
47
C23
22p
R27
39
C22
100p
C11
2u2 (1206)
C10
100n
L2
27nH
IC2
MGA31189
C9
100p
ANT
R18
1k8 (1206)
C17
100p
R15
27
C12
2u2 (1206)
WFM
ATV
C3
100p
R2
100
R4
100
R5
150
R7
150
R26
150
R28
150
C14
10uF
C13
680µF/6.3V
R11
5k6
LF IN
R10
10
R12
75 (opt)
R13
100
R16
4k7
TCXO
ASVTX-09 12.8
C18
4u7 (1206)
R17
4k7
Modifications
Date
Name
Date
Name
Description
B3Z 23cm v2
Page no.
Pages
PE5PVB
Schematic no.
Rev. B