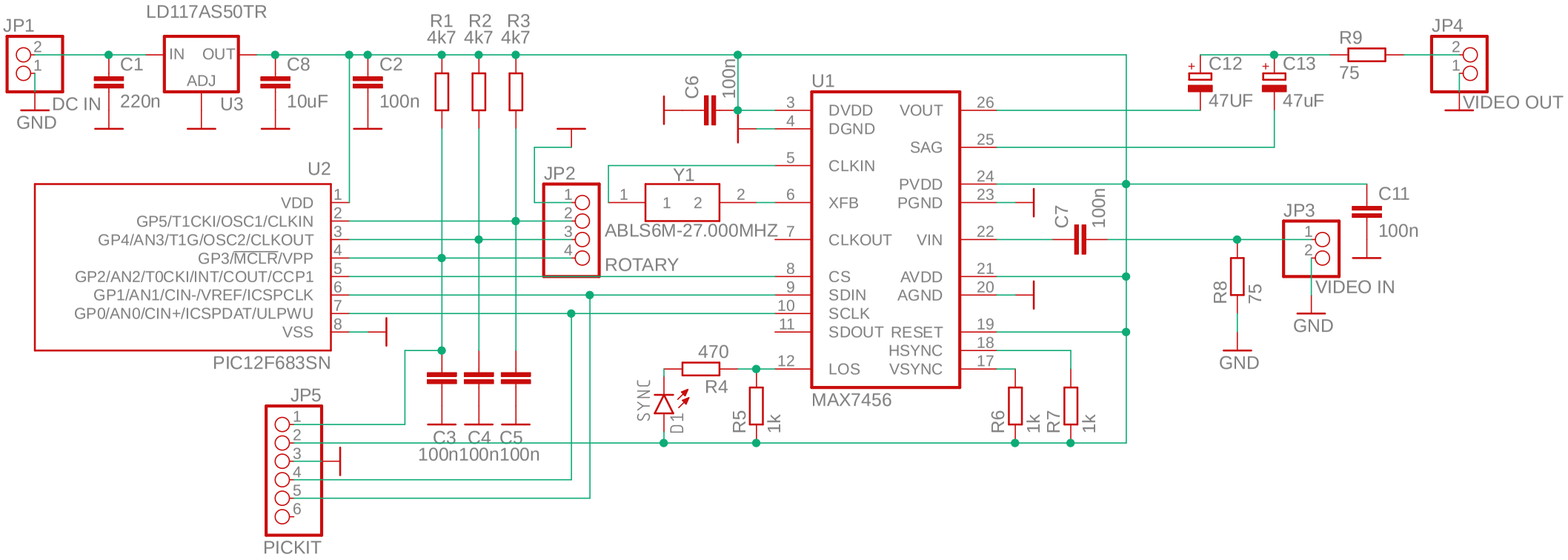
JP1
DC IN
GND
C1
220n
LD117AS50TR
IN
OUT
ADJ
U3
C8
10uF
C2
100n
R1
4k7
R2
4k7
R3
4k7
C6
100n
U1
DVDD
DGND
CLKIN
XFB
CLKOUT
CS
SDIN
SCLK
SDOUT
LOS
VOUT
SAG
PVDD
PGND
VIN
AVDD
AGND
RESET
HSYNC
VSYNC
MAX7456
C12
47UF
C13
47uF
R9
75
JP4
VIDEO OUT
U2
VDD
GP5/T1CKI/OSC1/CLKIN
GP4/AN3/T1G/OSC2/CLKOUT
GP3/MCLR/VPP
GP2/AN2/T0CKI/INT/COUT/CCP1
GP1/AN1/CIN-/VREF/ICSPCLK
GP0/AN0/CIN+/ICSPDAT/ULPWU
VSS
PIC12F683SN
JP2
ROTARY
Y1
ABLS6M-27.000MHZ
C7
100n
C11
100n
JP3
VIDEO IN
GND
R8
75
GND
470
R4
SYNC
D1
R5
1k
R6
1k
R7
1k
C3
100n
C4
100n
C5
100n
JP5
PICKIT